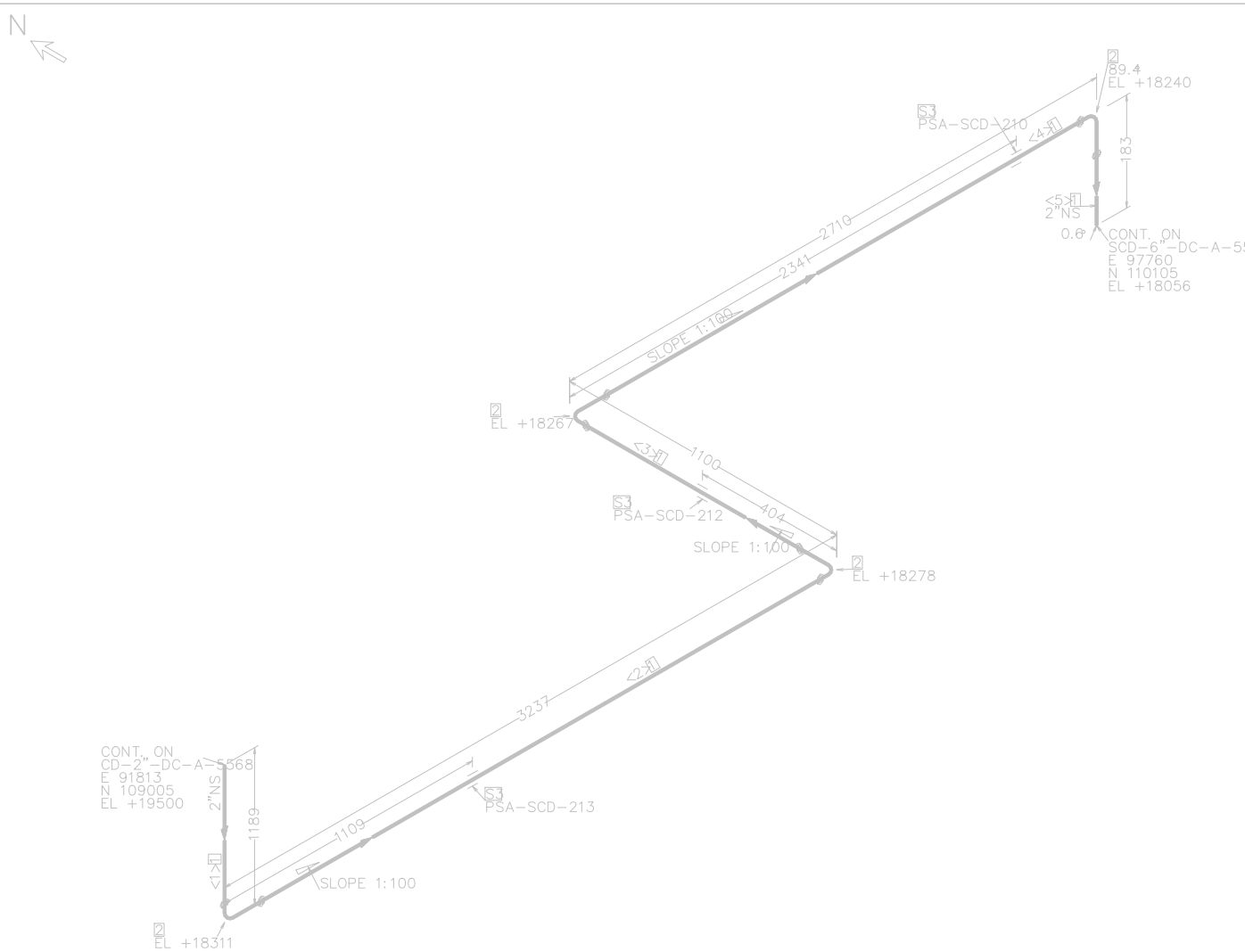

FABRICATION MATERIALS

PT NO	COMPONENT DESCRIPTION	N.S. (INS)	CLASS	QTY
	PIPE			
1	PIPE;SEAMLESS;;BE;;ASME B36.10 API 5L GR.B OR ASTM A106 GR.B;NACE MR0175; STD WT	2	A	7.9M
	FITTINGS			
2	ELBOW;90DEG.LR;SEAMLESS;BW;;ASME B16.9 ASTM A234 GR.WPB;NACE MR0175; STD WT	2	A	4
	SUPPORTS			
3	PS04- PIPE SHOE	2	–	3

CUT PIPE LENGTH

PIECE NO	CUT LENGTH(INS)	N.S.	PIECE NO	CUT LENGTH(INS)	N.S.
<1>	1114	2	<2>	3086	2
<3>	948	2	<4>	2559	2
<5>	108	2			

DESIGN PRESS:	1000 kpag	DESIGN TEMP:	0/65 °C
TEST PRESS:	2940 kpag	TEST WITH:	Water
RADIOGRAPHY:	100 %	STRESS RELIEVE:	NO
INSULATION SPEC:	N/A		
COATING SPEC:	DHF-00-M-S-0003		

STRESS CATEGORY

THIS LINE HAS BEEN STRESS ANALYSED
DO NOT ALTER THE ROUTING/MODIFY THE SUPPORTS
WITHOUT THE PRIOR APPROVAL OF PVE

NOTES:
1. ALL PIPES AT THE FIELD WELDS WILL BE ADDED 100MM LENGTH

No	DOCUMENT NUMBER	REV	SHT.No.	REV	DATE	DESCRIPTION	DRAWN	CHKED	EM	PM	DISCIPLINE	LEADER	SPMB
	REFERENCE DRAWINGS						SUB-CONTRACTOR				EpCI CONTRACTOR		
				3	29/10/15	Issued For Approval	N.H.Nam	Tony Tran	J.Sherman	D.N.Phong			
				2	09/06/15	Issued For Approval	N.H.Nam	Tony Tran	J.Sherman	D.N.Phong			
2	DHG-PVE-DD-1-PR-PID-1007			1	20/04/15	Issued For Approval	N.H.Nam	Tony Tran	J.Sherman	D.N.Phong			
1	DHG-PVE-DD-1-PR-PID-1005			0	03/04/15	Issued For Approval	N.H.Nam	Tony Tran	J.Sherman	D.N.Phong			

DATE	DATE	DATE	DATE
PVE	VSP	PVEP POC	CA

CLIENT: PETROVIETNAM DOMESTIC EXPLORATION PRODUCTION OPERATING COMPANY LIMITED

EpCI CONTRACTOR: VIETSOVPETRO JOINT VENTURE

ENGINEERING SUB-CONTRACTOR: PV ENGINEERING J.S.C

CAD File No: DHG-PVE-DD-1-PI-5552-SCD-

Scale: NTS

PROJECT: DAI HUNG GAS GATHERING PROJECT

PHASE: DETAILED ENGINEERING DESIGN

PDMS LINE NO.: SCD-2"-DC-A-5568

JOB	Drawing No.:	SHEET NO.	REV.
DHG	DHG-PVE-DD-1-PI-5552-SCD-	1 OF 1	3